Robbantott ábra / Alkatrészlista

PDC1200

36V-40Vmax LXT XGT

Li-Ion hordozható akkupakk

2021/01

PDC1200 / 36V-40Vmax LXT XGT Li-Ion hordozható akkupakk

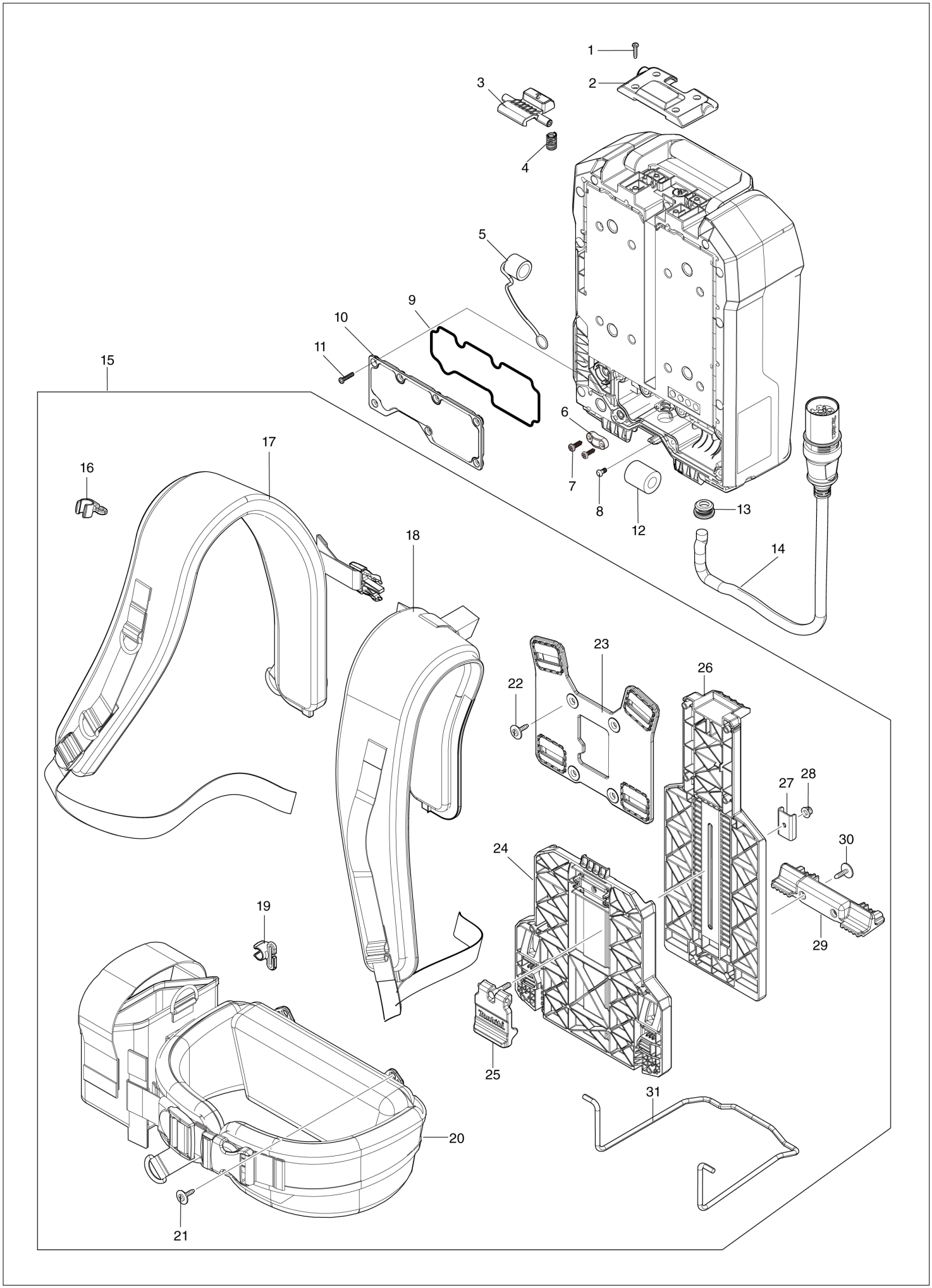

PDC1200 / 36V-40Vmax LXT XGT Li-Ion hordozható akkupakk

Item	Sub	Parts No.	Parts Description	Qty	I/C	E/C No.	Close No.	Remark
001		NC00000001	TAPPING SCREW 3X15	4				
002		NC00000002	CASE LEVER COVER	1				
003		NC00000003	CASE LOCK BUTTON	1				
004		NC00000004	COMPRESSION SPRING	1				
005		NC00000005	CHARGING CONNECTOR CAP	1				
006		NC00000006	CORD CLAMP	1				
007		NC00000011	TAPPING SCREW 4X14	2				
008		NC00000007	SCREW M4X8	5				
009		NC00000008	SEAL A	1				
010		NC00000009	CORD COVER	1				
011		NC00000001	TAPPING SCREW 3X15	7				
012		688233-3	LINE FILTER	1				
013		NC00000010	GROMMET	1				
014		699150-2	POWER SUPPLY CORD UNIT	1				
015		127668-8	HARNESS ASSEMBLY	1				
	D10		INC. 16-31					
016		412781-8	CORD HOLDER 11	2				
017		162848-9	BAND R COMPLETE	1				
018		162849-7	BAND L COMPLETE	1				
019		412781-8	CORD HOLDER 11	1				
020		162850-2	WAIST BELT	1				
021		252274-1	TAPPING SCREW 4X18 WITH W	4				
022		252274-1	TAPPING SCREW 4X18 WITH W	4				
023		412766-4	BACK PLATE	1				
024		412765-6	WAIST HARNESS PLATE	1				
025		140W51-0	LOCK LEVER COMPLETE	1				
026		140W29-3	HARNESS PLATE COMPLETE	1				
027		347740-2	PLATE	1				
028		252286-4	COLLARED HEX.LOCK NUT M5-8	1				
029		412767-2	BOTTOM HOLDER	1				
030		252274-1	TAPPING SCREW 4X18 WITH W	2				
031		327639-7	STAND	1				
A01		***DC4001	CHARGER	1				
	D10		COMPO-PARTS					
A02		191J51-5	ADAPTER SET	1				
	D10		COMPO-PARTS					

Interchange
O : Yes
X : No
< : the new part can be substituted for the current.
> : the current part can be substituted for the new.
S : Interchangeable as a set.