Diagram / Robbantott ábra

DHG181

akkumulátoros hőlégfúvó

2022/03

(AT) DHG181 / CORDLESS HEAT GUN

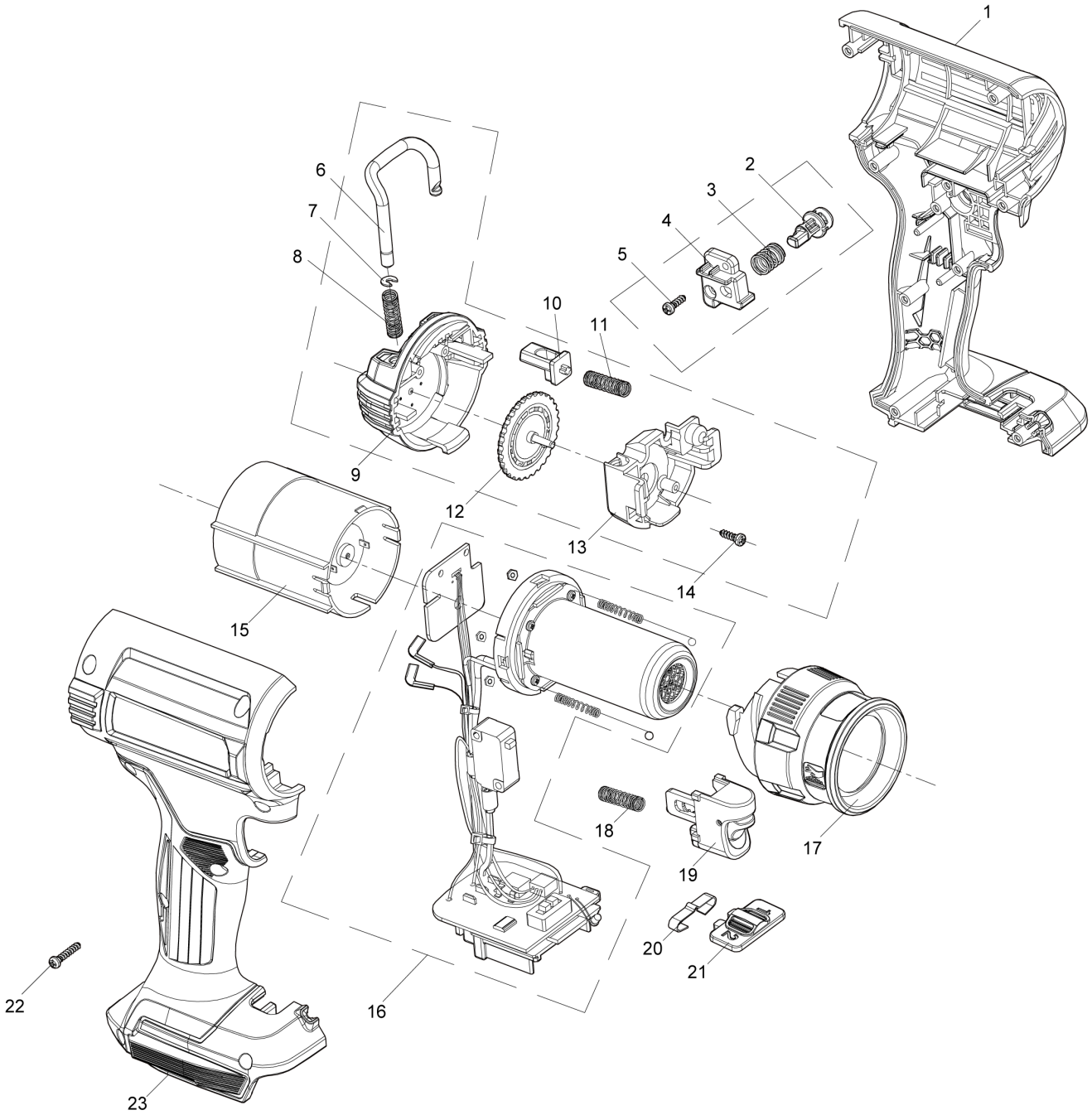

AT	AUSTRIA

DHG181 / CORDLESS HEAT GUN

Item	Sub	Parts No.	Parts Description	Qty	I/C	E/C No.	Close No.	Remark
001		PR00000420	HOUSING SET	1				
	D10		INC. 23					
002		PR00000380	LOCK ON BUTTON	1				
003		PR00000381	SPRING9	1				
004		PR00000382	SUPPORT FRAME	1				
005		PR00000293	TAPPING SCREW ST2.9X10	2				
006		PR00000383	HOOK	1				
007		PR00000384	SNAP RING	1				
008		PR00000385	SPRING6	1				
009		PR00000421	REAR COVER	1				
010		PR00000422	HOOK BUTTON	1				
011		PR00000388	SPRING5	1				
012		PR00000423	DIAL	1				
013		PR00000425	INNER COVER	1				
014		PR00000293	TAPPING SCREW ST2.9X10	3				
015		PR00000390	MOTOR ASSEMBLY	1				
016		PR00000427	HEATER ASSEMBLY	1				
	C10	PR00000424	NUT 2.5	2				
	C20	PR00000426	SCREW 2.5X10	2				
	C30	PR00000428	TENSION SPRING 3	2				
017		PR00000392	FRONT COVER ASSEMBLY	1				
018		PR00000393	SPRING 4	1				
019		PR00000394	TRIGGER ASSEMBLY	1				
020		PR00000429	LEAF SPRING	1				
021		PR00000430	CHANGE LEVER	1				
022		PR00000395	TAPPING SCREW ST2.9X16	8				
023		PR00000420	HOUSING SET	1				
	D10		INC. 1					
A01		PR00000031	REDUCTION NOZZLE 20mm	1				
A02		PR00000030	REFLECTOR NOZZLE	1				
A03		PR00000029	WIDE-SLOT NOZZLE	1				
A04		PR00000028	GLASS PROTECTION NOZZLE	1				
A06		821550-0	CONNECTOR PLASTIC CASE (TYPE2)	1				
	C10	453974-8	LATCH	4				
A15B		197280-8	BATTERY BL1850B SET	1				
A19B		***DC18RC	DC18RC FAST CHARGER	1				
	D10		COMPO-PARTS					

B:

Interchange
O : Yes
X : No
< : the new part can be substituted for the current.
> : the current part can be substituted for the new.
S : Interchangeable as a set.